REQUEST FOR PROPOSALS -
Regional Testing Center Site Drainage
RFP# MATC 2024-0002

MANHATTAN AREA TECHNICAL COLLEGE
3136 Dickens Ave, Manhattan, KS 66503
OCTOBER 30TH, 2024

BACKGROUND

Manhattan Area Technical College (hereafter known as the “MATC” or “The College”) was established in 1965 as Manhattan Area Vocational–Technical School. Educational programs were initially offered on the Manhattan High School campus. MATC's current campus, located at 3136 Dickens Avenue in Manhattan, Kansas, was occupied in 1967. Through the years, the increasing influence of advancing technology in business and industry, health and emergency services, and government has made strong technical skills a requirement in most professions. This evolution has made it popular to refer to vocational-technical training as, simply, technical education. In that spirit, the school was renamed in 1992 as Manhattan Area Technical Center. Legislation passed in 1994, Kansas Senate Bill 586 amended K.S.A. 72-4412 and provided the opportunity for technical schools to apply for conversion to technical colleges. In 1996, Governor Bill Graves signed into law Kansas House Bill 2606, which amended K.S.A. 72-4412, and designated the school as Manhattan Area Technical College. During its 2003 session, the Kansas Legislature passed Senate Bill 7, enabling technical colleges to move to autonomous governance independent of the public school system. On March 17, 2004, the Kansas Board of Regents approved MATC's governance plan. On July 1, the long process of gaining autonomous governance came to fruition. MATC is a public technical college governed by an appointed Board of Directors under a governance plan approved by the Kansas Board of Regents on March 17, 2004.

Manhattan Area Technical College is a public technical college governed by an appointed Board of Directors under a governance plan approved by the Kansas Board of Regents on March 17, 2004. The President of the College reports to the Board of Directors and supervises all College operations and instruction. In addition, more than 120 volunteer program advisory board members and general advisory members representing a cross section of business and industry advise MATC.

Mission: Manhattan Area Technical College provides quality technical and general education to prepare individuals to pursue technologically advanced careers and lead productive lives in a dynamic and diverse global environment.

Vision: As a leader in technical education, Manhattan Area Technical College will enhance student-centered learning and service to business, industry, and community members.

Values: In making decisions to advance the mission of Manhattan Area Technical College, the faculty and staff value:

> ***Integrity...***being accountable for our actions.
>
> ***Student-centered instruction...***addressing the needs of our students.
>
> ***Relevant program content...***applying industry recommendations.
>
> ***Quality performance...***striving for excellence.

Since its establishment, Manhattan Area Technical College has served an area of Kansas that includes citizens and communities in fourteen (14) counties. MATC has provided and continues to provide advanced education and technical preparation to individuals who hail from communities all over Kansas, other states, and other countries. Lastly, MATC is accredited by The Higher Learning Commission.

PURPOSE:

The REQUEST FOR PROPOSAL aims to establish a contract for addressing water drainage on the West side of campus and around our Regional Testing Center.

SCOPE OF SERVICES

Work within this Request for Proposal (RFP) shall include the following:

Installation and procurement of supplies to address existing water drainage issues on the West side of campus while utilizing the attached plan set on page 7. Design work for project has been completed by Olsson Civil Engineering.

Utilize the attached design provided by Olsson Engineering to provide pricing and a timeline to accomplish work.

General System Specifications:

- This quote is to include the installation, delivery, and labor to complete all work in associated attached design set starting on page 7. All tools and equipment needed for installation are the responsibility of the Contractor
- Please provide installation warranty details.
- Provide care instructions.
- Provide a timeline for the completion of the project, including the ordering date needed.

SITE VISITATION:

No site visits are mandatory but are encouraged if you have any questions. Visits will be scheduled as needed. Please contact Josh Gfeller, vice president of operations at 785-320-4550 joshgfeller@manhattantech.edu

ADDITIONAL INFORMATION:

The College reserves the right to make a written request for additional information from a Contractor/Vendor to assist in understanding or clarifying a Bid Proposal. The responses are to be provided in writing.

Required Safety Data Sheets (SDS) for material brought on site by the successful bidder must be available on site at all times.

If applicable, the Contractor is responsible for calling Kansas One-Call (811), the underground utility notification center for the state of Kansas.

In submitting this bid, it is understood that the right is reserved by the College to reject any or all bids, to make the award to other than the low bidder, to waive irregularities and/or informalities, and in general, to make the award in any manner deemed by the College in its sole discretion, to be in the best interest of the College.

COMPLIANCE BY CONTRACTORS WITH LAWS AND REGULATIONS

The Contractor agrees to abide by the requirements of the following as applicable: Title IV of the Civil Rights Act of 1964 and Title IVV of the Civil Rights Act of 1964, as amended by the Equal Employment Opportunity Act of 1972. Federal Executive Order 11246 as amended, the Rehabilitation Act of 1973, as amended, the Vietnam Era Veteran's Readjustment Assistance Act of 1974, Title IX of the Education Amendments of 1972, the Age Discrimination Act of 1975 and Americans with Disabilities Act of 1990. Contractor also agrees not to discriminate, in its employment practices, and will render services under the contract without regard to race, color, religion, sex, sexual orientation, national origin, veteran status, political affiliation, and/or disability. Any act of discrimination committed by the contract, or failure to comply with these statutory obligations when applicable shall be grounds for termination of the contract.

INSURANCE

The Contractor awarded the contract will need to furnish MATC a Certificate of Liability with comprehensive general liability insurance against all claims of bodily injury, death, or property damage, in amounts of not less than $250,000 per claim and $1,000,000 per incident. This is done at the Contractor's sole expense and shall require any subcontractor or assignee to obtain and maintain insurance.

The contractor must provide proof of workers' compensation insurance coverage for all of its employees on this site. Any exemptions to coverage must be outlined in the Certificate of Liability Insurance.

Bids are due on November 20th, 2024, by 5:00 pm. Bids must be electronic and emailed to the VPO at joshgfeller@manhattantech.edu or a sealed bid may be dropped off or mailed to

Manhattan Area Technical College

ATTN: Josh Gfeller

3136 Dickens Ave, Manhattan KS 66503

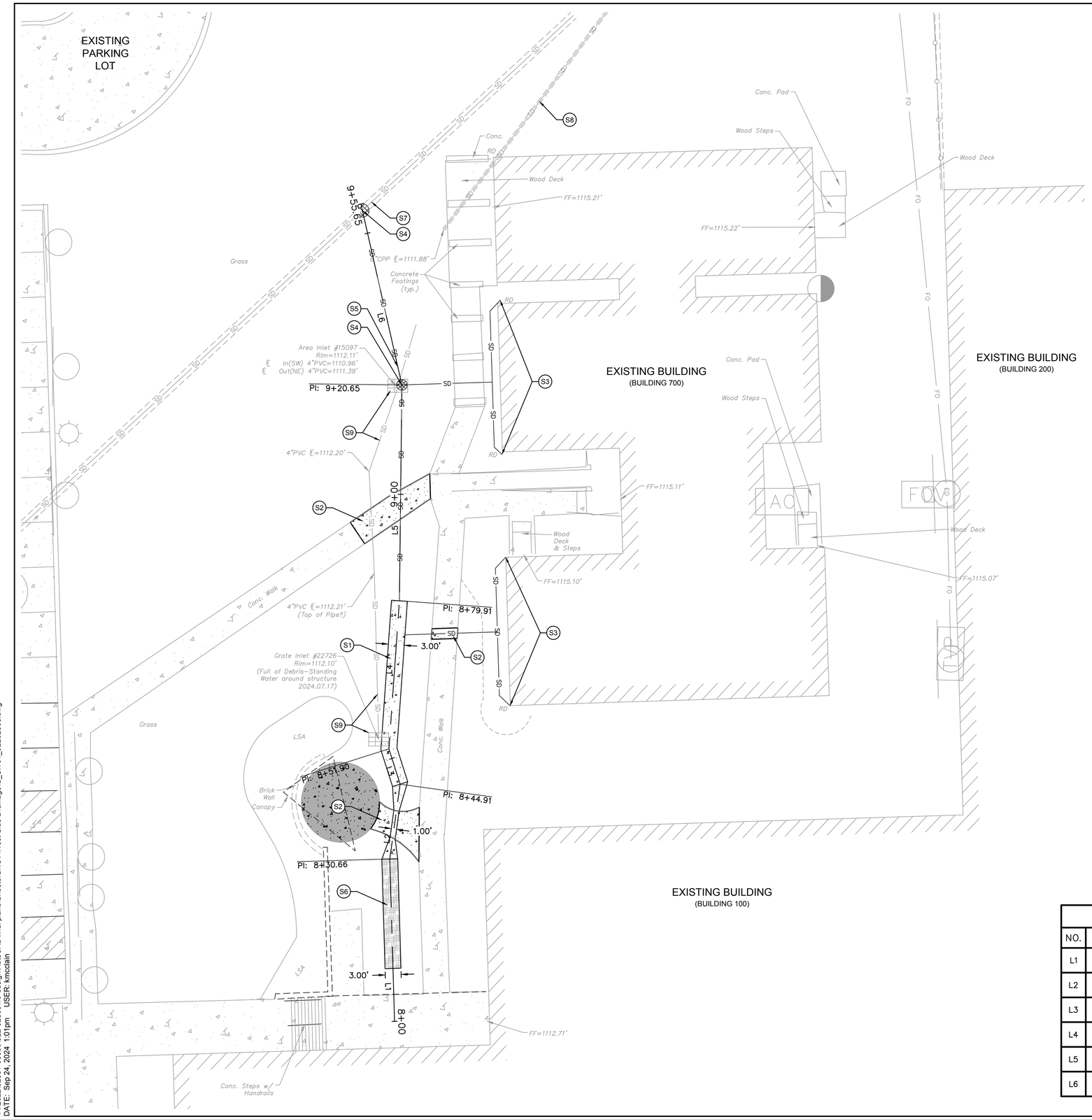

LEGEND

- CONCRETE SIDEWALK
- CONCRETE SIDEWALK (ADD ALTERNATE)
- GRADE BREAKLINE
- 1030 — EXISTING GROUND CONTOUR
- 1030 — FINISHED GROUND CONTOUR
- TP — TOP OF PAVEMENT
- TI — TOP OF INLET
- ME — MATCH EXISTING

N

0' 5' 10' 20'
SCALE IN FEET

SITE PLAN KEYNOTE LEGEND

S1 CONSTRUCT CONCRETE TRICKLE CHANNEL, REFER TO C300.

S2 REMOVE & REPLACE CONCRETE SIDEWALK.

S3 INSTALL DOWNSPOUT ADAPTER. REFER TO C400.

S4 INSTALL NYLOPLAST DRAIN BASIN. REFER TO SHEET C400.

S5 INSTALL STORM SEWER. REFER TO SHEET C300.

S6 INSTALL SWALE TO DRAIN TO SIDEWALK FLUME. REFER TO SHEET C300.

S7 EXISTING STORM SEWER TO REMAIN. FIELD VERIFY LOCATION AND ALL FLOWLINES PRIOR TO CONSTRUCTION.

S8 ABANDON EXISTING STORM SEWER.

S9 REMOVE EXISTING STORM SEWER.

SITE PLAN NOTES

1. ALL PAVEMENT DIMENSIONS ARE TO BACK OF CURB, OR EDGE OF PAVEMENT WHERE NO CURB IS PRESENT, UNLESS OTHERWISE NOTED. DIMENSIONED TIES BETWEEN PROPERTY LINES AND BUILDING FACES OR PAVEMENT ARE AS INDICATED. THE CONTRACTOR IS RESPONSIBLE FOR MAKING ANY ADJUSTMENTS NECESSARY FOR FOUNDATIONS, BEDDING EXTENSIONS, SURCHARGING, ETC.
2. INSTALLED PAVEMENT SHALL MATCH EXISTING PAVEMENT IN GRADE AND ALIGNMENT TO PROVIDE SMOOTH SURFACE TRANSITIONS.
3. CONCRETE PAVEMENT JOINTS SHALL BE CONSTRUCTED AS FOLLOWS:
   - A. CONTROL JOINTS SPACED AS SHOWN IN THESE PLANS OR AT INTERVALS NOT GREATER THAN 1.5x PANEL WIDTH OR 12 FEET (WHICHEVER IS SMALLER).
   - B. CONTROL JOINTS SHALL BE TOOLED OR SAWCUT TO ¼ THE SLAB THICKNESS. LOCAL STANDARDS AND SPECIFICATIONS SHALL TAKE PRECEDENCE WHERE MORE STRICT THAN THOSE LISTED HERE.
   - C. CONSTRUCTION JOINTS PLACED AT THE END OF EACH POUR AND WHEN PAVING OPERATIONS ARE SUSPENDED FOR 30 MINUTES OR MORE.
   - D. ISOLATION JOINTS PLACED WHERE THE PAVEMENT ABUTS THE BUILDING, DRAINAGE STRUCTURES AND OTHER FIXED STRUCTURES, CONSTRUCTED WITH A 1/2" NON–EXTRUDING FILLER, CLOSED–CELL FOAM RUBBER OR A BITUMEN–TREATED FIBER–BOARD, AND WITH A THICKENED EDGE, INCREASED BY 20 PERCENT, TAPERED TO THE REGULAR THICKNESS IN 5 FEET.
   - E. ALL EXPANSION JOINTS SHALL BE FILLED AND SEALED WITH A PLASTIC JOINT SEALANT MATERIAL.

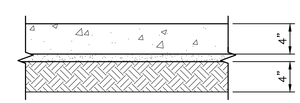

4000 PSI AIR ENTRAINED PORTLAND CEMENT CONCRETE PAVEMENT
1" SAND LEVELING BASE
PREPARED SUBGRADE COMPACTED TO 95% MAX. DENSITY AS PER ASTM–D698 (STANDARD PROCTOR COMPACTION)

SIDEWALK SECTION

PAVEMENT SECTIONS

NOT TO SCALE

SWALE									
NO.		STATION	NORTHING	EASTING	LENGTH	LINE/CHORD BEARING	DELTA	TANGENT	RADIUS
L1		8+00.00 8+30.66	317808.3291 317838.9792	1704519.5016 1704518.6000	30.66'	N1°41'06"W			
L2		8+30.66 8+44.91	317838.9792 317853.0892	1704518.6000 1704520.5535	14.24'	N7°52'57"E			
L3		8+44.91 8+51.90	317853.0892 317859.7528	1704520.5535 1704518.4389	6.99'	N17°36'21"W			
L4		8+51.90 8+79.91	317859.7528 317887.6916	1704518.4389 1704520.4204	28.01'	N4°03'24"E			
L5		8+79.91 9+20.65	317887.6916 317928.4261	1704520.4204 1704520.8886	40.74'	N0°39'31"E			
L6		9+20.65 9+55.65	317928.4261 317962.5622	1704520.8886 1704513.1605	35.00'	N12°45'23"W			

olsson
302 South 4th Street
Suite 110
Manhattan, KS 66502
olsson.com
TEL 785.539.6900
FAX 785.539.6901

JARED E. LOOMIS
LICENSED
26355
KANSAS
PROFESSIONAL ENGINEER
Jared E. Loomis
9-24-24

REV. NO.	DATE	DESCRIPTION	BY

REVISIONS

SITE PLAN

WEST SIDE DRAINAGE
MATC

MANHATTAN, KANSAS

2024

drawn by: KMM
designed by: JEL
project no.: 022-02865
date: 09.24.2024

SHEET
C100

F:\2022\02501-03000\022-02865\40-design\AutoCAD\final plans\Sheets\GNCV\West Side Drainage\C_SIT01_02202865.dwg
DATE: Sep 24, 2024 1:01pm USER: kmcclain

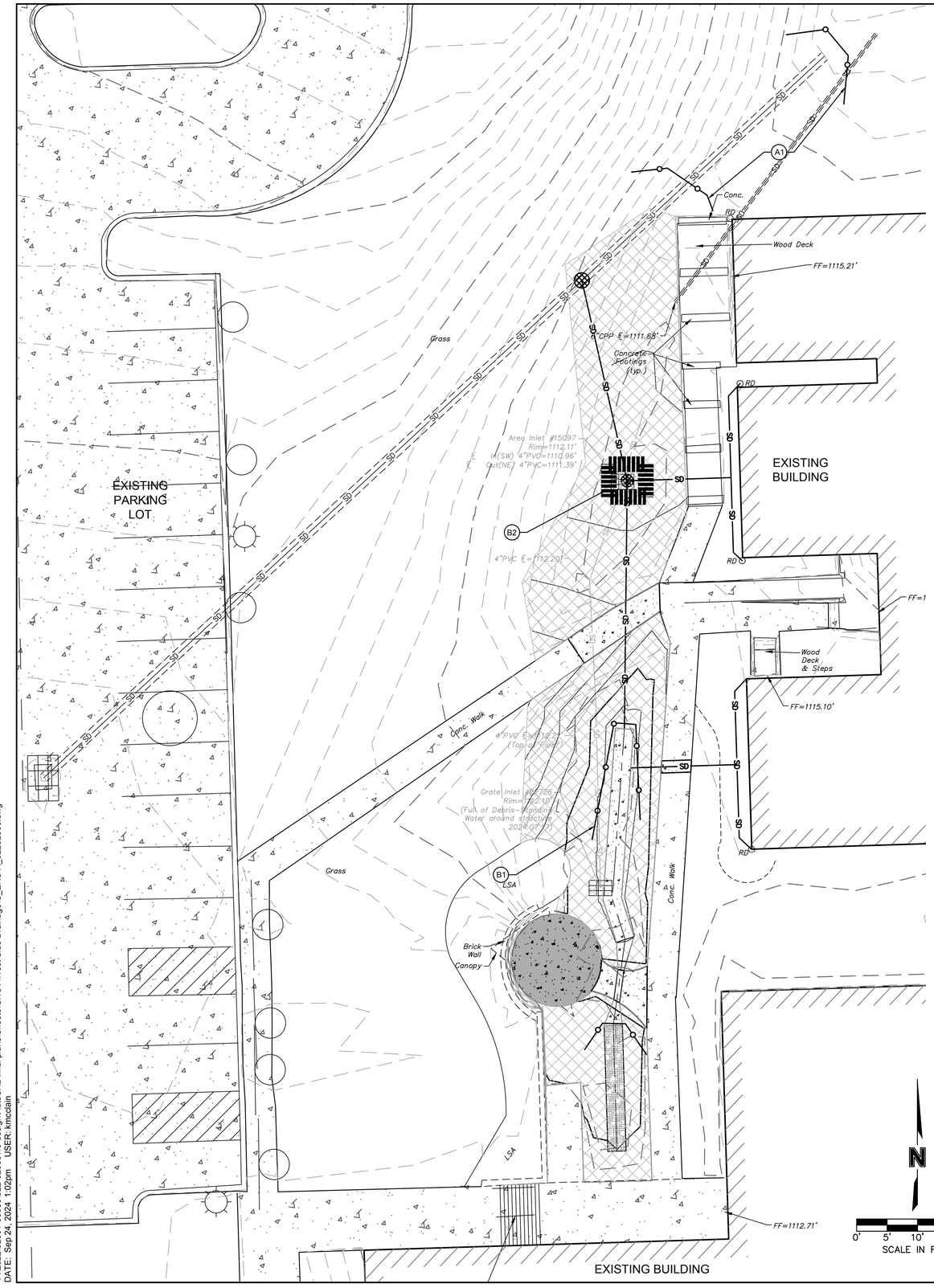

GENERAL EROSION CONTROL NOTES:

1. THE CONTRACTOR SHALL BE RESPONSIBLE FOR MAINTENANCE AND REPAIR OF ALL EROSION & SEDIMENT CONTROL MEASURES AND PRACTICES THROUGHOUT THE PROJECT AND ON THE ADJACENT PUBLIC AND PRIVATE STREETS. THE CONTRACTOR SHALL INSPECT THE EROSION CONTROL MEASURES AT A MINIMUM OF ONCE EVERY TWO WEEKS AND WITH THE EXCEPTION OF SATURDAYS, SUNDAYS, AND ESTABLISHED FEDERAL HOLIDAYS BY THE END OF THE NEXT DAY FOLLOWING A RAINFALL EVENT OF 0.50" OR GREATER AND KEEP THE DEVICES IN OPERABLE CONDITION AT ALL TIMES.
2. FAILURE TO FLOW THE KANSAS WATER POLLUTION CONTROL GENERAL PERMIT AND AUTHORIZATION TO DISCHARGE WILL SUBJECT THE CONTRACTORS TO THE PENALTIES PROVIDED THEREIN. ANY AND ALL FINES ASSOCIATED WITH VIOLATIONS WILL BE THE CONTRACTOR'S RESPONSIBILITY.
3. THE CONTRACTOR SHALL BE RESPONSIBLE FOR RESOLVING ANY COMPLAINTS DUE TO DAMAGES OCCURRING ADJACENT TO, OR DOWNSTREAM FROM, PROPERTY BY SEDIMENT AS A RESULT OF INADEQUATE EROSION CONTROL PRACTICES.
4. GOOD HOUSEKEEPING PRACTICES SHALL BE MAINTAINED ON SITE AT ALL TIMES.
5. EROSION CONTROL IS THE CONTRACTOR'S RESPONSIBILITY. THIS PLAN SHOULD BE USED AS A GUIDE AND REPRESENTS THE MINIMUM EROSION CONTROL DEVICES REQUIRED. THE CONTRACTOR SHALL PROVIDE ANY ADDITIONAL EROSION CONTROL MEASURES TO THOSE LISTED AND/OR SHOWN AND ENSURE THAT SILT WILL NOT LEAVE THE PROJECT LIMITS.
6. ALL EROSION CONTROL DEVICES SHALL CONFORM TO THE APPLICABLE SECTIONS OF THE STANDARD SPECIFICATIONS AND DESIGN CRITERIA OF THE GOVERNING BODY AND THE STATE DEPARTMENT OF HEALTH & ENVIRONMENT, WATER POLLUTION CONTROL DIVISION, MOST CURRENT EDITIONS.
7. AT ANY TIME DURING CONSTRUCTION THE GOVERNING AUTHORITY MAY REQUIRE ADDITIONAL EROSION/SILTATION CONTROL MEASURES TO BE INSTALLED IN ORDER TO ADDRESS PROBLEM SITUATIONS OBSERVED ON THE SITE. WHEN REQUIRED SUCH MEASURES SHALL BE INSTALLED WITHIN 48 HOURS OF THE CITY ENGINEER'S VERBAL OR WRITTEN ORDER.
8. THE CONTRACTOR SHALL BE REQUIRED TO REGULARLY UPDATE AND MAINTAIN THE SWPPP PER THE PREVIOUSLY AUTHORIZED NOI.
   - THE CONTRACTOR WILL TRANSFER THE PROJECT INTO THEIR NAME IF REQUESTED.
   - THE CONTRACTOR SHALL BE RESPONSIBLE FOR COMPLETION OF THE WORK IN ACCORDANCE WITH THE REQUIREMENTS OF THE CONTRACT DOCUMENTS, THE PREPARED SWPPP, AND THE KANSAS WATER POLLUTION CONTROL GENERAL PERMIT AND AUTHORIZATION TO DISCHARGE.
9. WHEN REQUESTED AND AT THE CONCLUSION OF THE PROJECT, THE CONTRACTOR WILL PROVIDE THE OWNER A COPY OF ALL UPDATES, AMENDMENTS, LOGS AND INSPECTION REPORTS FOR REVIEW AND FOR PROJECT RECORD KEEPING.

PRE-CONSTRUCTION PHASE NOTES:

ALL EROSION CONTROL DEVICES SHOWN IN THE PRE-CONSTRUCTION PHASE MUST BE IN PLACE PRIOR TO DISTURBING ONSITE SOIL. DISTURBANCE NECESSARY TO PRE-CONSTRUCTION EROSION CONTROL SHALL BE MINIMAL AND ONLY THAT REQUIRED FOR INSTALLATION. COORDINATE NECESSARY CLEARING WITH LOCAL WEATHER FORECAST SO THAT CLEARING AND PLACEMENT TAKE PLACE DURING A DRY PERIOD.

1. CONSTRUCTION ENTRANCES SHALL BE INSTALLED AT ANY POINT WHERE TRAFFIC WILL BE ENTERING OR LEAVING THE SITE.
2. INSTALL SILT FENCE AT THE DOWN HILL GRADING EXTENTS.
3. INSTALL STRUCTURAL EROSION CONTROL DEVICES AS INDICATED ON PLANS.

CONSTRUCTION PHASE NOTES:

EROSION CONTROL DEVICES INSTALLED IN THE CONSTRUCTION PHASE SHALL BE INSTALLED BY THE CONTRACTOR ACCORDING TO THE CONSTRUCTION SCHEDULE. THE CONTRACTOR MAY MODIFY PLANS OR CONSTRUCTION SEQUENCE; ANY SUCH MODIFICATIONS SHALL REQUIRE THE APPROVAL OF THE PERMITTING AUTHORITY.

1. AREAS WHICH WILL BE INACTIVE FOR 14 DAYS SHALL BE TEMPORARILY SEEDED WITH ANNUAL FAST GROWING VEGETATION. STRAW MULCH SHALL BE APPLIED AND MAINTAINED UNTIL VEGETATION IS ESTABLISHED.
   A. STEEP SLOPES (ABOVE 15%) SHALL BE SEEDED WITH AN EROSION CONTROL BLANKET INSTALLED IN PLACE OF MULCH.
2. IF AT THE END OF DAILY OPERATION THE LOCAL WEATHER FORECAST CALLS FOR RAIN WITHIN 24 HOURS OR IF GRADING OPERATIONS WILL SUSPENDED FOR LONGER THEN 24 HOURS, THEN INSTALL A TEMPORARY TOP OF SLOPE DIVERSION AT ALL STEEP SLOPES.
3. INSTALL CHECK DAMS AND STABILIZATION STABILIZATION MEASURES IN NEWLY CONSTRUCTED CHANNELS.
4. INSTALL INTERMITTENT SILT FENCE DOWN HILL OF LOCALIZED ON SITE GRADING.
5. THE CONTRACTOR SHALL BE RESPONSIBLE FOR THE CONTROL OF DUST AND DIRT RISING AND SCATTERING IN THE AIR DURING CONSTRUCTION AND SHALL PROVIDE WATER SPRINKLING OR OTHER SUITABLE METHODS OF CONTROL.
6. MUD AND DEBRIS SHALL BE CLEANED FROM THE STREET AT THE CONCLUSION OF EACH WORKING DAY.
7. KEEP WEEDS AND GRASSES IN CONTROL EVERY 14 DAYS WITHIN THE PROJECT SITE AND ALONG ALL SIDES OF PROJECT FENCE AND SILT FENCE.
8. INSPECT THE EROSION CONTROL MEASURES AT A MINIMUM OF ONCE EVERY TWO WEEKS AND WITH THE EXCEPTION OF SATURDAYS, SUNDAYS, AND ESTABLISHED FEDERAL HOLIDAYS BY THE END OF THE NEXT DAY FOLLOWING A RAINFALL EVENT OF 0.50" OR GREATER AND KEEP THE DEVICES IN OPERABLE CONDITION AT ALL TIMES.
9. THE CONTRACTOR SHALL BE RESPONSIBLE FOR REMOVING THE TEMPORARY EROSION AND SEDIMENT CONTROL DEVICES ONLY WHEN AREAS HAVE BEEN STABILIZED WITH A HEALTHY STAND OF VEGETATION.

FINAL STABILIZATION PHASE NOTES:

SEED FOR FINAL STABILIZATION. DOWNHILL PERIMETER CONTROLS AND INLET PROTECTION ARE NOT TO BE REMOVED UNTIL FINAL STABILIZATION IS PLACED AND VEGETATIVE COVER IS ESTABLISHED OVER THE ENTIRE SITE.

1. WITHIN 14 DAYS AFTER COMPLETION OF FINISHED GRADING AND OTHER RELATED CONSTRUCTION ACTIVITIES, ALL DISTURBED AREAS WITHIN THE PROJECT SITE SHALL BE PERMANENTLY STABILIZED.
2. THE CONTRACTOR SHALL ENSURE THAT ALL DRAINAGE STRUCTURES, FLUMES, PIPES, ETC. ARE CLEANED OUT AND WORKING PROPERLY AT TIME OF ACCEPTANCE.
3. THE CONTRACTOR SHALL PROVIDE CLEANING OF ACCESS ROUTE AT CONCLUSION OF THE PROJECT.

SEEDING NOTES:

1. ALL AREAS DESIGNATED TO TURF SEED SHALL BE SEEDED WITH TURF-TYPE TALL FESCUE SOD WITH A MINIMUM OF 3 CULTIVARS, PURE LIVE SEED WITH A GERMINATION RATE OF 90% OR GREATER, AT A RATE OF 90 LBS PER ACRE.
2. ALL SEEDED AREAS SHALL RECEIVE A MINIMUM 6-INCH DEPTH OF TOPSOIL COMPACTED TO 85% MAXIMUM DENSITY AT OPTIMUM MOISTURE CONTENT.
3. THE ENTIRE SURFACE TO BE SEEDED SHALL BE REASONABLY SMOOTH AND FREE FROM STONES, ROOTS, OR OTHER DEBRIS.
4. MOISTEN PREPARED SURFACE IMMEDIATELY PRIOR TO SEEDING. WATER THOROUGHLY AND ALLOW SURFACE TO DRY BEFORE SEEDING. FERTILIZER, HARROW OR RAKE FERTILIZER IN THE TOP 1-1/2 INCHES OF TOPSOIL, AT A UNIFORM RATE OF ONE POUND OF NITROGEN PER 1000 S.F.
5. FERTILIZER SHALL BE 20-10-5 COMMERCIAL FERTILIZER OF THE GRADE, TYPE, AND FORM SPECIFIED AND SHALL COMPLY WITH THE RULES OF THE STATE OF KANSAS DEPT. OF AGRICULTURE. FERTILIZER SHALL BE IDENTIFIED ACCORDING TO THE PERCENT N, P, K, IN THAT ORDER.
6. ALL SEEDED AREAS SHALL BE ORGANICALLY MULCHED AT A RATE OF 1½ TO 2 TONS PER ACRE RESULTING IN A MULCH LAYER OF ½ TO 1½ INCHES THICK WHERE THERE WILL NOT BE EROSION CONTROL BLANKET. MULCH SHALL BE PLACED LOOSE AND OPEN ENOUGH TO ALLOW SOME SUNLIGHT TO PENETRATE AND AIR TO CIRCULATE BUT MAINTAINING A MINIMUM COVER OF 70% OF THE SOIL SURFACE. ALL MULCH SHALL BE CRIPPED INTO THE SOIL TO LIMIT BLOWING OF THE MULCH.
7. SATURATE SEEDED AREAS WITH FINE WATER SPRAY WITHIN TWO HOURS OF PLANTING. DURING FIRST WEEK AFTER PLANTING, WATER AS NECESSARY TO MAINTAIN MOIST SOIL.
8. CONTRACTOR SHALL PROVIDE FULL MAINTENANCE FOR SEEDED TURF GRASS FOR A PERIOD OF 30 DAYS AFTER THE DATE OF FINAL ACCEPTANCE. AT THE END OF THE MAINTENANCE PERIOD, A HEALTHY, WELL-ROOTED, EVEN-COVERED, VIABLE TURF MUST BE ESTABLISHED. THE TURF GRASS SHALL BE FREE OF WEEDS, BARE AREAS, AND SURFACE IRREGULARITIES.

EROSION CONTROL LEGEND

- 1160 — EXISTING CONTOUR
- 1160 — PROPOSED CONTOUR
- STRAW WATTLE
- SILT FENCE
- PERMANENT SEEDING

EROSION & SEDIMENT CONTROL STAGING CHART

PHASE	PROJECT STAGE	EROSION REFERENCE NO.	DESCRIPTION	REMOVE AFTER STAGE:	NOTES
A	DEMOLITION	A1	SILT FENCE	C	INSTALL PRIOR TO SOIL DISTURBANCE
B	GRADING & CONSTRUCTION	B1	SILT FENCE	C	INSTALL AS INDICATED ON PLANS
		B2	WATTLE	C	
C	FINAL STABILIZATION	C1	PERMANENT SEEDING & MULCHING	N/A	INSTALL AS INDICATED ON PLANS

olsson
302 South 4th Street
Suite 110
Manhattan, KS 66502
olsson.com
TEL 785.539.6900
FAX 785.539.6901

JARED E. LOOMIS LICENSED 26355 KANSAS PROFESSIONAL ENGINEER
9-24-24

REV. NO.	DATE	DESCRIPTION	BY

REVISIONS

EROSION CONTROL PLAN

WEST SIDE DRAINAGE
MATC

MANHATTAN, KANSAS 2024

drawn by: KMM
designed by: JEL
project no.: 022-02865
date: 09.24.2024

SHEET
C200

F:\2022\02501-03000\022-02865\40-design\AutoCAD\final plans\Sheets\GNCV\West Side Drainage\C_ERC-A_02202865.dwg
DATE: Sep 24, 2024 1:02pm USER: kmcclain

LEGEND

EG	EXISTING GRADE
FL	FLOW LINE
TP	TOP OF PAVEMENT
TI	TOP OF INLET
— — — 1030 — — —	EXISTING GROUND CONTOUR
——— 1030 ———	FINISHED GROUND CONTOUR

N

0' 5' 10' 20'
SCALE IN FEET

10' 5' 2.5' 0'

STORM SEWER PLAN NOTES

1. PRIOR TO COMMENCEMENT OF WORK THE CONTRACTOR SHALL NOTIFY AND COORDINATE CONSTRUCTION WITH THE OWNER.
2. THE CONTRACTOR SHALL EXPOSE EXISTING UTILITIES AT LOCATIONS OF POSSIBLE CONFLICT AND POINTS OF CONNECTION PRIOR TO ANY CONSTRUCTION OF STORM SEWER.
3. STORM SEWER TRENCHES SHALL BE CONSTRUCTED SUCH THAT UNDISTURBED EXISTING SOIL OR FILL COMPACTED TO 95% PROCTOR DENSITY IS AT A DEPTH THAT IS 18" ABOVE TOP OF PROPOSED PIPE.
4. STRUCTURE INVERT CHANNELS SHALL BE SMOOTH, CIRCULAR, AND CONFORMING TO ½ THE ADJACENT PIPE SECTION (INVERT TO CENTER). CHANGES IN DIRECTION OF FLOW SHALL BE MADE WITH A SMOOTH CURVE AND MAINTAIN SHAPE THROUGHOUT. CHANGES IN GRADE OF ADJACENT PIPES SHALL BE TRANSITIONED SMOOTHLY AND EVENLY THROUGH THE STRUCTURE.
5. PIPE PENETRATIONS SHALL BE GROUTED TO ENSURE WATERTIGHT SEALS.
6. COORDINATES PROVIDED ARE AT THE CENTER OF THE STRUCTURES ON JUNCTION BOXES AND THE BACK OF CURB AT THE CENTER OF STRUCTURE ON CURB INLETS. NYLOPLAST DRAIN BASIN COORDINATES ARE PROVIDED AT THE CENTER OF THE STRUCTURE.
7. ALL PIPE LENGTHS AND ELEVATIONS ARE CALCULATED LINEARLY FROM CENTER OF STRUCTURE TO CENTER OF STRUCTURE.
8. ALL HDPE PIPE SHALL BE ADS DUAL WALL N-12 PIPE WITH SOIL TIGHT JOINTS WITH SMOOTH INTERIOR WALL AND CORRUGATED EXTERIOR OR PRE-APPROVED EQUAL.

GRADING PLAN NOTES

1. THE CONTOUR LINES, SPOT ELEVATIONS AND BUILDING FLOOR ELEVATIONS SHOWN ARE TO FINISH GRADE, SURFACE OF PAVEMENT, TOP OF CURBS, ETC. REFER TO TYPICAL SECTIONS FOR PAVING, SLAB AND AGGREGATE BASE THICKNESS TO DEDUCT PAVEMENT DEPTH FROM ELEVATIONS SHOWN.
2. THE CONTRACTOR SHALL FINISH GRADE SLOPES AS SHOWN NO STEEPER THAN 1 FOOT VERTICAL IN 3 FEET HORIZONTAL.
3. THE CONTRACTOR SHALL GRADE LANDSCAPED AREAS TO PROVIDE POSITIVE DRAINAGE AWAY FROM BUILDING AND SIDEWALKS WHEN FINISH LANDSCAPE MATERIALS ARE IN PLACE.
4. SPOT ELEVATIONS ARE TO EDGE OF PAVEMENT, LIP OF CURB, OR FINISHED GRADE UNLESS OTHERWISE INDICATED. (SEE LEGEND)
5. OFF-SITE FILL MATERIAL SHALL BE IN ACCORDANCE WITH THE RECOMMENDATIONS OF THE GEOTECHNICAL REPORT. OFF-SITE FILL MATERIAL SHALL BE APPROVED BY THE OWNER PRIOR TO BRINGING ON SITE.
6.

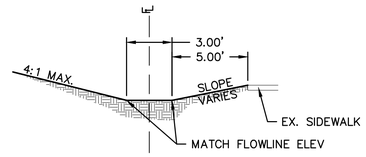

SWALE - TYP. SECTION
NOT TO SCALE

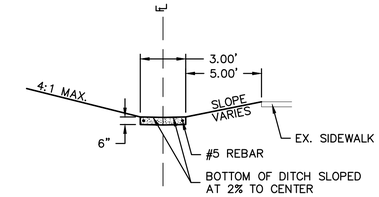

CONCRETE TRICKLE CHANNEL - TYP. SECTION
NOT TO SCALE

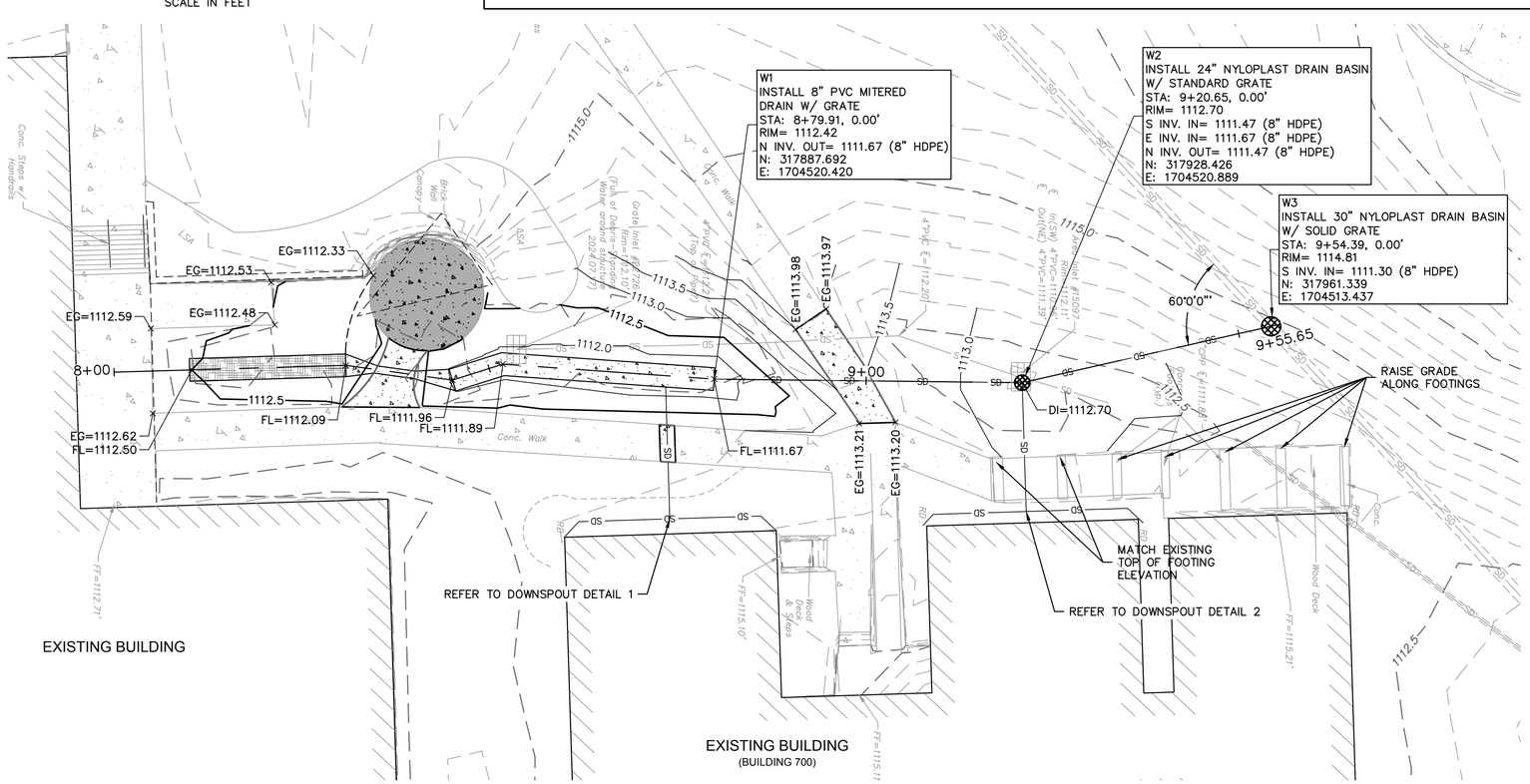

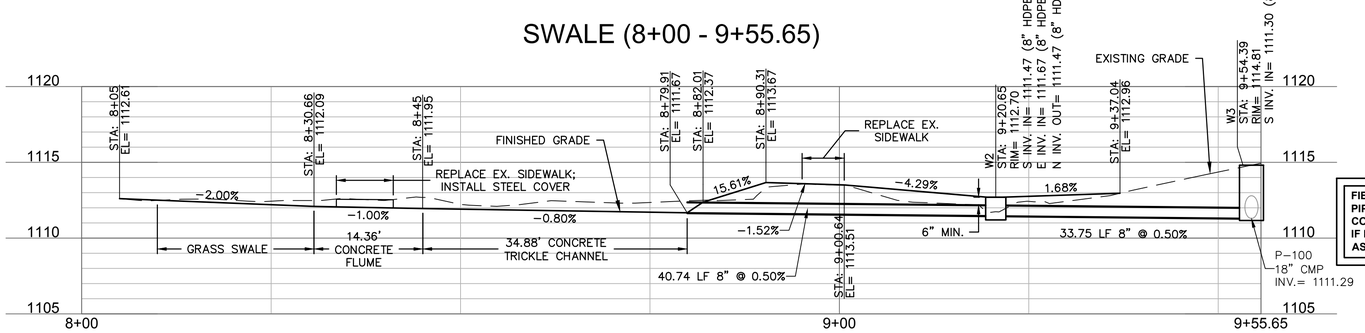

FIELD VERIFY EXISTING 18" PIPE FLOWLINE AND COORDINATE WITH ENGINEER IF ELEVATION VARIES FROM ASSUMED FLOWLINE.

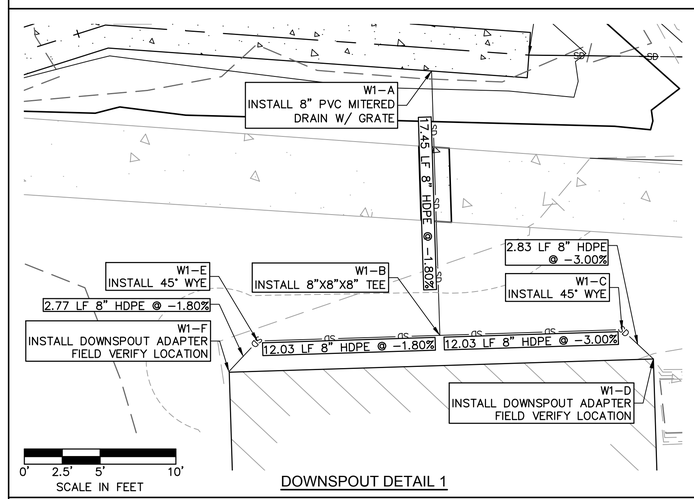

DOWNSPOUT DETAIL 1

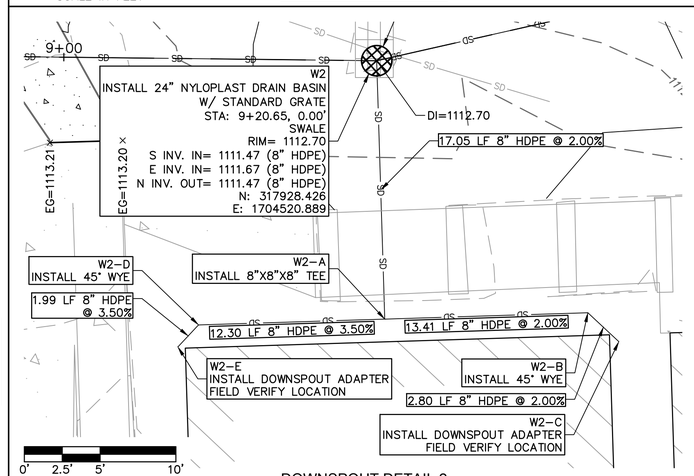

DOWNSPOUT DETAIL 2

olsson
302 South 4th Street
Suite 110
Manhattan, KS 66502
olsson.com
TEL 785.539.6900
FAX 785.539.6901

JARED E. LOOMIS
LICENSED
26355
KANSAS
PROFESSIONAL ENGINEER
9-24-24

REV. NO.	DATE	DESCRIPTION	BY

REVISIONS

GRADING & STORM SEWER PLAN

WEST SIDE DRAINAGE
MATC

MANHATTAN, KANSAS

2024

drawn by: KMM
designed by: JEL
project no.: 022-02865
date: 09.24.2024

SHEET
C300

F:\2022\02501-030000\022-02865\40-design\AutoCAD\final plans\Sheets\GNCV\West Side Drainage\C_GRD01_02202865.dwg
DATE: Sep 24, 2024 1:03pm USER: kmcclain

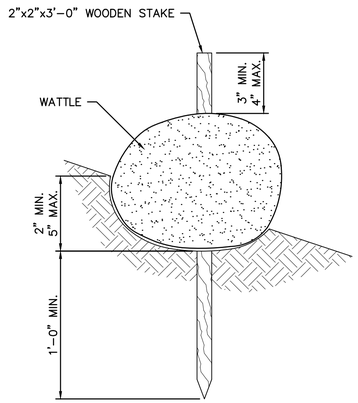

WATTLE DETAIL
NOT TO SCALE

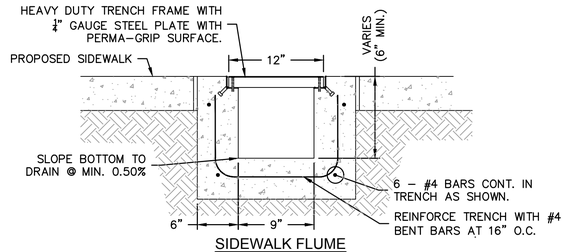

SIDEWALK FLUME
NOT TO SCALE

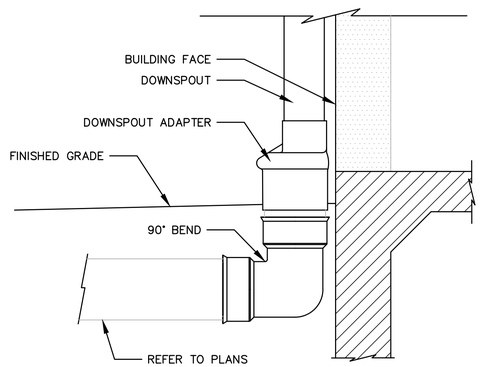

DOWNSPOUT CONNECTION DETAIL
NOT TO SCALE

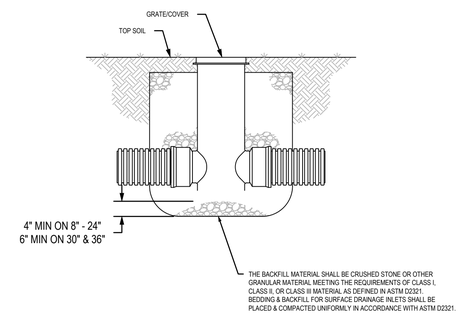

DRAIN BASIN

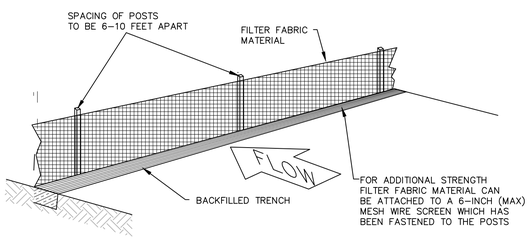

SILT FENCE BARRIERS
(NOT TO SCALE)

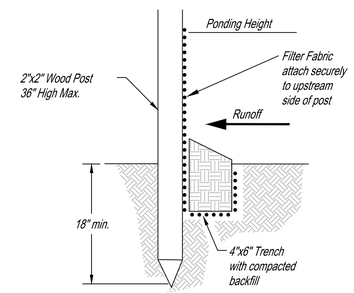

ANCHOR DETAIL
(NOT TO SCALE)

MATERIAL SPECIFICATION:

SILT FENCE FABRIC SHOULD CONFORM TO THE AASHTO M288 96 SILT FENCE SPECIFICATION.
THE POSTS USED TO SUPPORT THE SILT FENCE FABRIC SHOULD BE A HARDWOOD MATERIAL WITH THE FOLLOWING MINIMUM DIMENSIONS: 2" SQUARE (NOMINAL) BY 4' LONG.
SILT FENCE FABRIC SHOULD BE ATTACHED TO THE WOODEN POSTS WITH STAPLES, WIRE, ZIP TIES, OR NAILS.

PLACEMENT:

A SLOPE BARRIER SHOULD BE USED AT THE TOE OF A SLOPE WHEN A DITCH DOES NOT EXIST. THE SLOPE BARRIER SHOULD BE PLACED ON NEARLY LEVEL GROUND 5' TO 10' AWAY FROM THE TOE OF A SLOPE. THE BARRIER IS PLACED AWAY FROM THE TOE OF THE SLOPE TO PROVIDE ADEQUATE STORAGE FOR SETTLING OUT SEDIMENT.
WHEN PRACTICABLE, SILT FENCE SLOPE BARRIERS SHOULD BE PLACED ALONG CONTOURS TO AVOID A CONCENTRATION OF FLOW.
SILT FENCE SLOPE BARRIERS CAN ALSO BE PLACED ALONG RIGHT-OF-WAY FENCE LINES TO KEEP SEDIMENT FROM CROSSING ONTO ADJACENT PROPERTY. WHEN PLACED IN THIS MANNER, THE SLOPE BARRIER WILL NOT LIKELY FOLLOW CONTOURS.

INSPECTION AND MAINTENANCE:

SILT FENCE SLOPE BARRIERS SHOULD BE INSPECTED EVERY 7 DAYS AND WITHIN 24 HOURS OF A RAINFALL OF 1/2" OR MORE. THE FOLLOWING IS A LIST OF QUESTIONS THAT SHOULD BE ADDRESSED DURING EACH INSPECTION:
ARE THERE ANY POINTS ALONG THE SLOPE BARRIER WHERE WATER IS CONCENTRATING? DOES WATER FLOW UNDER THE SLOPE BARRIER? DO THE SILT FENCES SAG EXCESSIVELY?
HAS THE SILT FENCE TORN OR BECOME DETACHED FROM THE POSTS?
DOES SEDIMENT NEED TO BE REMOVED FROM BEHIND THE SLOPE BARRIER?

LIST OF COMMON PLACEMENT/INSTALLATION MISTAKES TO AVOID:

WHEN PRACTICABLE, DO NOT PLACE SILT FENCE SLOPE BARRIERS ACROSS CONTOURS. SLOPE BARRIERS SHOULD BE PLACED ALONG CONTOURS TO AVOID A CONCENTRATION OF FLOW. WHEN THE FLOW CONCENTRATES, IT OVERTOPS THE BARRIER AND THE SILT FENCE SLOPE BARRIER QUICKLY DETERIORATES.
DO NOT PLACE SILT-FENCE POSTS ON THE UPSLOPE SIDE OF THE SILT FENCE FABRIC. IN THIS CONFIGURATION, THE FORCE OF THE WATER IS NOT RESTRICTED BY THE POSTS, BUT ONLY BY THE STAPLES (WIRE, ZIP TIES, NAILS, ETC.). THE SILT FENCE WILL RIP AND FAIL.
DO NOT PLACE SILT FENCE SLOPE BARRIERS IN AREAS WITH SHALLOW SOILS UNDERLAIN BY ROCK. IF THE BARRIER IS NOT SUFFICIENTLY ANCHORED, IT WILL WASH OUT.
SILT FENCE SLOPE BARRIERS MUST BE DUG INTO THE GROUND-SILT FENCE AT GROUND LEVEL DOES NOT WORK BECAUSE WATER WILL FLOW UNDERNEATH.

PROPER INSTALLATION METHOD:

EXCAVATE A TRENCH THE LENGTH OF THE PLANNED SLOPE BARRIER THAT IS 6" DEEP BY 4" WIDE. MAKE SURE THAT THE TRENCH IS EXCAVATED ALONG A SINGLE CONTOUR. WHEN PRACTICABLE, SLOPE BARRIERS SHOULD BE PLACED ALONG CONTOURS TO AVOID A CONCENTRATION OF FLOW. PLACE THE SOIL ON THE UPSLOPE SIDE OF THE TRENCH FOR LATER USE.
ROLL OUT A CONTINUOUS LENGTH OF SILT FENCE FABRIC ON THE DOWNSLOPE SIDE OF THE TRENCH. PLACE THE EDGE OF THE FABRIC IN THE TRENCH STARTING AT THE TOP UPSLOPE EDGE. LINE ALL THREE SIDES OF THE TRENCH WITH THE FABRIC. BACKFILL OVER THE FABRIC IN THE TRENCH WITH THE EXCAVATED SOIL AND COMPACT. AFTER FILLING THE TRENCH, APPROXIMATELY 24" TO 36" OF SILT-FENCE FABRIC SHOULD REMAIN EXPOSED.
LAY THE EXPOSED SILT FENCE UPSLOPE OF THE TRENCH TO CLEAR AN AREA FOR DRIVING IN THE POSTS. JUST DOWNSLOPE OF THE TRENCH, DRIVE POSTS INTO THE GROUND TO A DEPTH OF AT LEAST 18".
PLACE POSTS NO MORE THAN 4' APART.
ATTACH THE SILT FENCE TO THE ANCHORED POST WITH STAPLES, WIRE, ZIP TIES, OR NAILS.

SILT FENCE
(NOT TO SCALE)

NYLOPLAST DRAIN BASIN WITH STANDARD GRATE

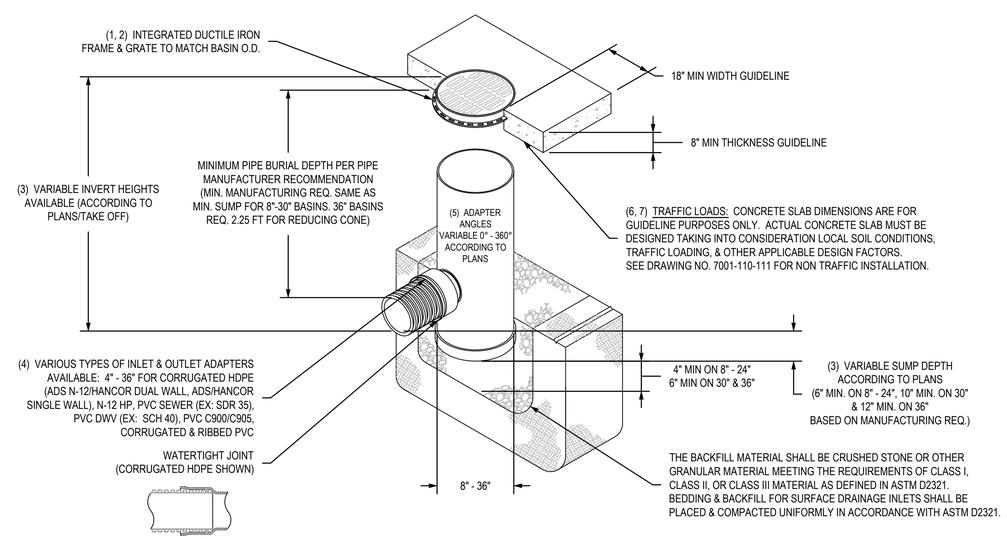

1 - 8" - 30" STANDARD GRATES SHALL BE DUCTILE IRON PER ASTM A536 GRADE 70-50-05.
2 - 12" - 30" FRAMES SHALL BE DUCTILE IRON PER ASTM A536 GRADE 70-50-05. 8" & 10" STANDARD GRATES FIT DIRECTLY ONTO DRAIN BASINS WITH THE USE OF A PVC BODY TOP. SEE DRAWING NO. 7001-110-045.
3 - DRAIN BASIN TO BE CUSTOM MANUFACTURED ACCORDING TO PLAN DETAILS. RISERS ARE NEEDED FOR BASINS OVER 84" DUE TO SHIPPING RESTRICTIONS. SEE DRAWING NO. 7001-110-065.
4 - DRAINAGE CONNECTION STUB JOINT TIGHTNESS SHALL CONFORM TO ASTM D3212 FOR CORRUGATED HDPE (ADS N-12/HANCOR DUAL WALL), N-12 HP, & PVC SEWER (4" - 36").
5 - ADAPTERS CAN BE MOUNTED ON ANY ANGLE 0° TO 360°. TO DETERMINE MINIMUM ANGLE BETWEEN ADAPTERS SEE DRAWING NO. 7001-110-012.
6 - 12" - 30" STANDARD GRATES SHALL MEET H-20 LOAD RATING.
7 - 8" & 10" STANDARD GRATES ARE RATED FOR LIGHT DUTY APPLICATIONS ONLY; NO CONCRETE COLLAR NEEDED FOR LIGHT DUTY RATING.

olsson
302 South 4th Street
Suite 110
Manhattan, KS 66502
olsson.com
TEL 785.539.6900
FAX 785.539.6901

JARED E. LOOMIS
LICENSED
26355
KANSAS
PROFESSIONAL ENGINEER
9-24-24

REV. NO.	DATE	DESCRIPTION	BY

REVISIONS

DETAILS

WEST SIDE DRAINAGE
MATC

MANHATTAN, KANSAS

2024

drawn by: KMM
designed by: JEL
project no.: 022-02865
date: 09.24.2024

SHEET
C400

F:\2022\02501-03000\022-02865\40-design\Auto\CAD\final plans\Sheets\GNCV\West Side Drainage\C_DTL01_02202865.dwg
DATE: Sep 24, 2024 1:04pm USER: kmcclain